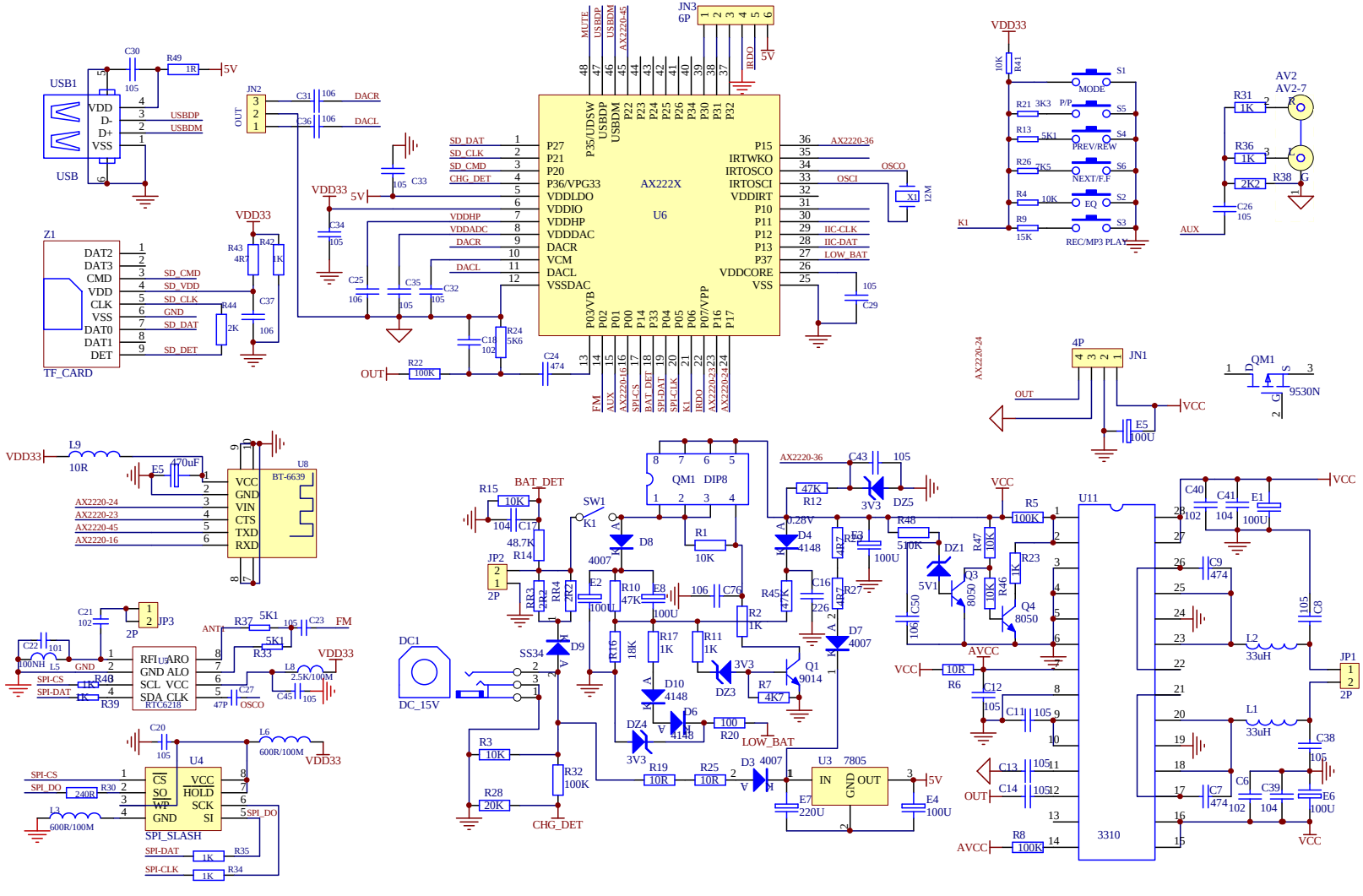
USB1
USB
VDD
D-
D+
VSS
C30
105
R49
1R
5V
JN2
OUT
C31
106
DACR
C36
106
DACL
VDD33
5V
C33
105
C34
105
Z1
TF_CARD
DAT2
DAT3
CMD
VDD
CLK
VSS
DAT0
DAT1
DET
SD_CMD
SD_VDD
SD_CLK
GND
SD_DAT
SD_DET
R43
4R7
R42
1K
R44
2K
C37
106
C25
106
C35
105
C32
105
C18
102
R24
5K6
R22
100K
OUT
C24
474
JN3
6P
MUTE
USBDP
USBDM
AX2220-45
IRDO
AX222X
U6
SD_DAT
SD_CLK
SD_CMD
CHG_DET
VDDHP
VDDADC
DACR
DACL
P27
P21
P20
P36/VPG33
VDDLDO
VDDIO
VDDHP
VDDDAC
DACR
VCM
DACL
VSSDAC
P35/UDSW
P03/VB
P02
P01
P00
P14
P33
P04
P05
P06
P07/VPP
P16
P17
P15
IRTWKO
IRTOSCO
IRTOSCI
VDDIRT
P10
P11
P12
P13
P37
VDDCORE
VSS
AX2220-36
OSCO
OSCI
X1
12M
IIC-CLK
IIC-DAT
LOW_BAT
C29
105
FM
AUX
AX2220-16
SPI-CS
BAT_DET
SPI-DAT
SPI-CLK
K1
IRDO
AX2220-23
AX2220-24
VDD33
10K
R41
S1
MODE
R21
3K3
P/P
S5
R13
5K1
PREV/REW
S4
R26
7K5
NEXT/F.F
S6
R4
10K
EQ
S2
R9
15K
REC/MP3 PLAY
S3
K1
AV2
AV2-7
R31
1K
R36
1K
R38
2K2
C26
105
AUX
AX2220-24
4P
JN1
OUT
VCC
E5
100U
QM1
9530N
L9
10R
E5
470uF
U8
BT-6639
VCC
GND
VIN
CTS
TXD
RXD
AX2220-24
AX2220-23
AX2220-45
AX2220-16
C21
102
JP3
2P
C22
101
100NH
L5
GND
SPI-CS
SPI-DAT
R40
1K
R39
1K
RFI
GND
SCL
SDA
ARO
ALO
VCC
CLK
RTC6218
ANT
R37
5K1
C23
105
FM
R33
5K1
VDD33
L8
2.5K/10M
C27
47P
OSCO
C45
105
C20
105
L6
600R/100M
VDD33
U4
SPI_SLASH
CS
SO
WP
GND
VCC
HOLD
SCK
SI
SPI_DO
R30
240R
L3
600R/100M
SPI-DAT
R35
1K
SPI-CLK
R34
1K
DC1
DC_15V
R15
10K
C17
104
BAT_DET
SW1
K1
48.7K
R14
JP2
2P
RR3
RR2
RR4
2K2
4007
D8
E2
100U
R10
47K
E8
100U
106
C76
QM1
DIP8
R1
10K
R2
1K
R45
47K
C16
226
R27
4K7
D7
4007
SS34
D9
R16
18K
R17
1K
R11
1K
3V3
DZ3
Q1
9014
R7
4K7
D10
4148
D6
4148
DZ4
3V3
R20
100
LOW_BAT
R3
10K
R32
100K
R28
20K
CHG_DET
R19
10R
R25
10R
D3
4007
E7
220U
U3
7805
IN
OUT
GND
5V
E4
100U
AX2220-36
C43
105
47K
R12
1.28V
3V3
DZ5
R36
E3
100U
R48
510K
DZ1
5V1
R47
10K
R23
1K
Q3
8050
R46
10K
Q4
8050
C50
106
VCC
R5
100K
AVCC
VCC
10R
R6
C12
105
C11
105
C13
105
C14
105
OUT
R8
100K
AVCC
U11
3310
C40
102
C41
104
E1
100U
VCC
C9
474
L2
33uH
105
C8
JP1
2P
L1
33uH
C38
105
C6
C39
104
E6
100U
C7
474
102
VCC